1 WALL TYPES

A-14 | A-14

SCALE: 1" = 1'-0"

A

-SEE FINISH SCHEDULE FOR SPECIAL WALL BOARD TYPES

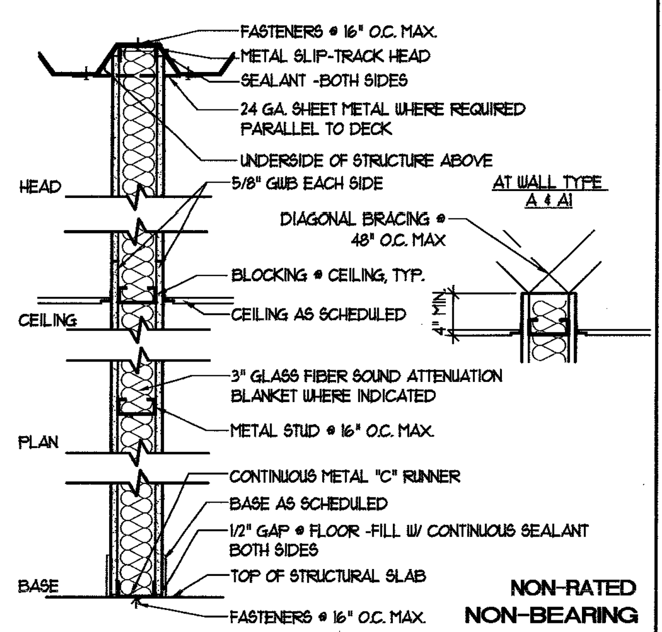

NON-RATED NON-BEARING

TYPE	TOTAL THK.	STUD SIZE	GA	LIMITING HGT. W/ STUDS @ 16"O.C. *	NOTES	STC RTG.	UL NO.	FIRE RTG.
A	4 7/8"	3 5/8"	25	16'-0"	-	38	-	-
A1	7 1/4"	6"	25	20'-0"	-	38	-	-
A2	4 7/8"	3 5/8"	25	16'-0"	SOUND BLANKETS GWB TO STRUCTURE	44	-	-
A3	7 1/4"	6"	25	20'-0"	SOUND BLANKETS GWB TO STRUCTURE	44	-	-
A4	7 1/4"	6"	25	20'-0"	GWB TO STRUCTURE	38	-	-
A5	4 5/8"	3 5/8"	25	16'-0"	REPLACE 5/8" GWB WITH 1/2" CEMENT BOARD BOTH SIDES	-	-	-
A6	4 3/4"	3 5/8"	25	16'-0"	SOUND BLANKETS GWB TO STRUCTURE REPLACE 5/8" GWB WITH 1/2" CEMENT BOARD RESTROOM SIDE ONLY	44	-	-

-PROVIDE MID-POINT BLOCKING (TYP.)
* L/240 MAXIMUM ALLOWABLE DEFLECTION

B

-SEE FINISH SCHEDULE FOR SPECIAL WALL BOARD TYPES

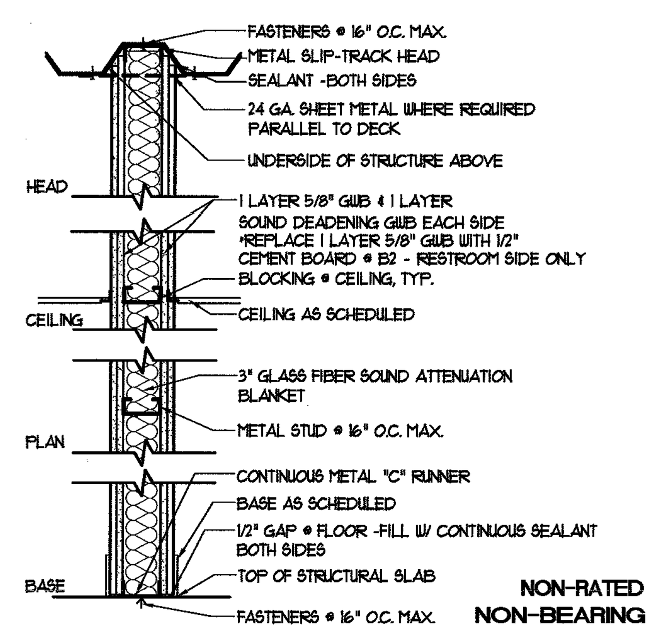

NON-RATED NON-BEARING

TYPE	TOTAL THK.	STUD SIZE	GA	LIMITING HGT. W/ STUDS @ 16"O.C. *	NOTES	STC RTG.	UL NO.	FIRE RTG.
B	6 1/8"	3 5/8"	20	20'-2"		59	-	-
B1	8 1/2"	6"	25	20'-0"		59	-	-
B2	6 "	3 5/8"	20	20'-2"		59	-	-

-PROVIDE MID-POINT BLOCKING (TYP.)
* L/240 MAXIMUM ALLOWABLE DEFLECTION

C

-SEE FINISH SCHEDULE FOR SPECIAL WALL BOARD TYPES

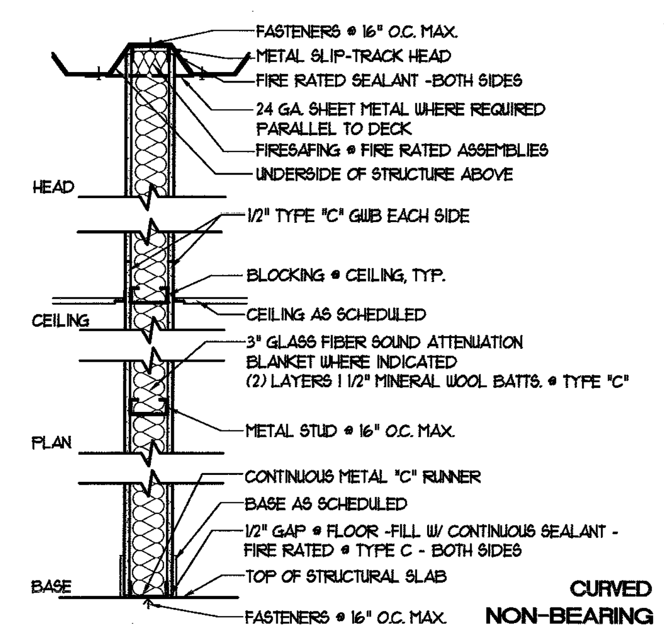

CURVED NON-BEARING

TYPE	TOTAL THK.	STUD SIZE	GA	LIMITING HGT. W/ STUDS @ 16"O.C. *	NOTES	STC RTG.	UL NO.	FIRE RTG.
C	7"	6"	25	20'-0"	MINERAL WOOL BATTS. GWB TO STRUCTURE	44	U 448	1 HR
C1	7"	6"	25	20'-0"	SOUND BLANKETS GWB TO STRUCTURE	44	-	-

-PROVIDE MID-POINT BLOCKING (TYP.)
* L/240 MAXIMUM ALLOWABLE DEFLECTION

D

-SEE FINISH SCHEDULE FOR SPECIAL WALL BOARD TYPES

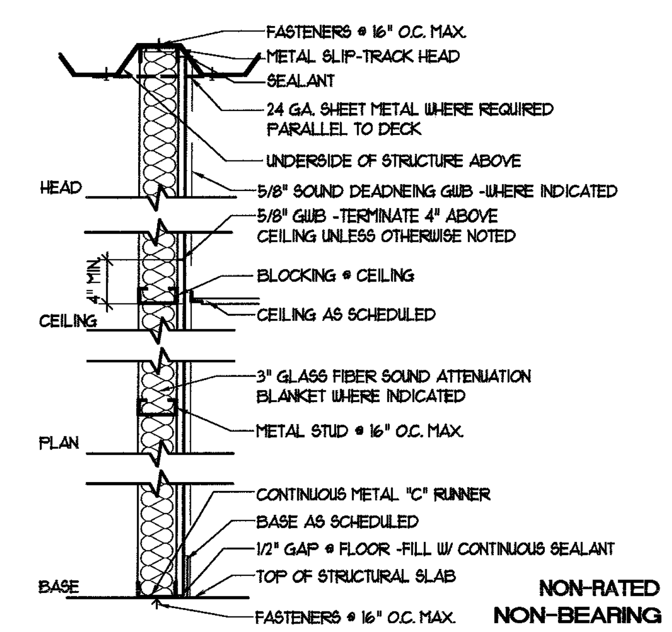

NON-RATED NON-BEARING

TYPE	TOTAL THK.	STUD SIZE	GA	LIMITING HGT. W/ STUDS @ 16"O.C. *	NOTES	STC RTG.	UL NO.	FIRE RTG.
D	4 1/4"	3 5/8"	25	14'-6"	-	-	-	-
D1	4 1/4"	3 5/8"	25	14'-6"	SOUND BLANKETS GWB TO STRUCTURE	-	-	-
D2	6 5/8"	6"	25	20'-0"	-	-	-	-
D3	6 5/8"	6"	25	20'-0"	SOUND BLANKETS GWB TO STRUCTURE	-	-	-
D4	4 7/8"	3 5/8"	25	14'-6"	SOUND BLANKETS TWO LAYERS OF GWB	-	-	-
D5	4 1/8"	3 5/8"	25	14'-6"	REPLACE 5/8" GWB WITH 1/2" CEMENT BOARD	-	-	-

-PROVIDE MID-POINT BLOCKING (TYP.)
* L/240 MAXIMUM ALLOWABLE DEFLECTION

E

-SEE FINISH SCHEDULE FOR SPECIAL WALL BOARD TYPES

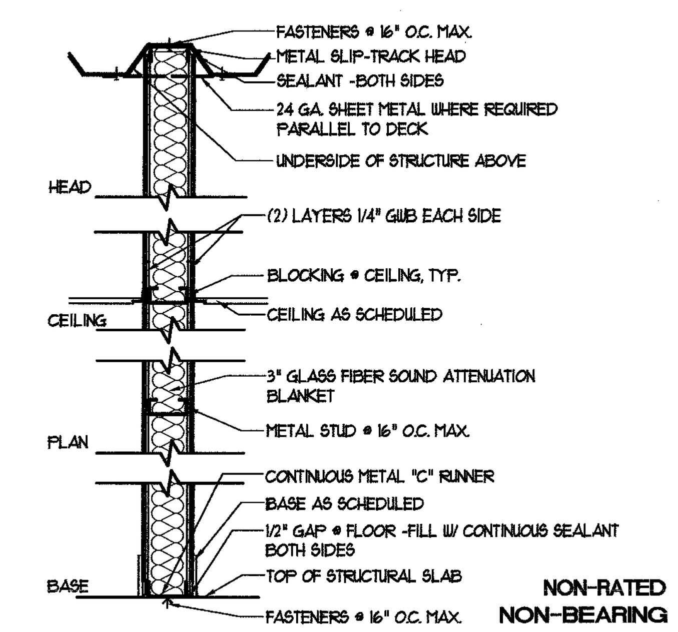

NON-RATED NON-BEARING

TYPE	TOTAL THK.	STUD SIZE	GA	LIMITING HGT. W/ STUDS @ 16"O.C. *	NOTES	STC RTG.	UL NO.	FIRE RTG.
E	4 5/8"	3 5/8"	25	16'-0"	-	38	-	-
E1	7"	6"	25	20'-0"	-	44	-	-
E2	7"	6"	18	20'-0"	-	44	-	-

-PROVIDE MID-POINT BLOCKING (TYP.)
* L/240 MAXIMUM ALLOWABLE DEFLECTION

F

-SEE FINISH SCHEDULE FOR SPECIAL WALL BOARD TYPES

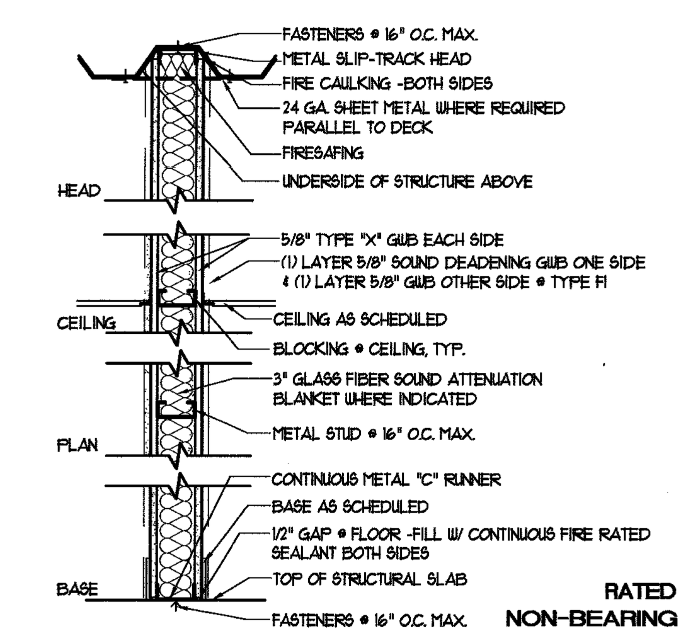

RATED NON-BEARING

TYPE	TOTAL THK.	STUD SIZE	GA	LIMITING HGT. W/ STUDS @ 16"O.C. *	NOTES	STC RTG.	UL NO.	FIRE RTG.
F	4 7/8"	3 5/8"	25	16'-0"	SOUND BLANKETS GWB TO STRUCTURE	44	U465	1 HR
F1	8 1/2"	6"	25	20'-0"	SOUND BLANKETS (2) LAYERS GWB TO STRUCT.	59	U465	1 HR
F2	7 1/4"	6"	25	20'-0"	SOUND BLANKETS GWB TO STRUCT.	44	U465	1 HR

-PROVIDE MID-POINT BLOCKING (TYP.)
* L/240 MAXIMUM ALLOWABLE DEFLECTION

G

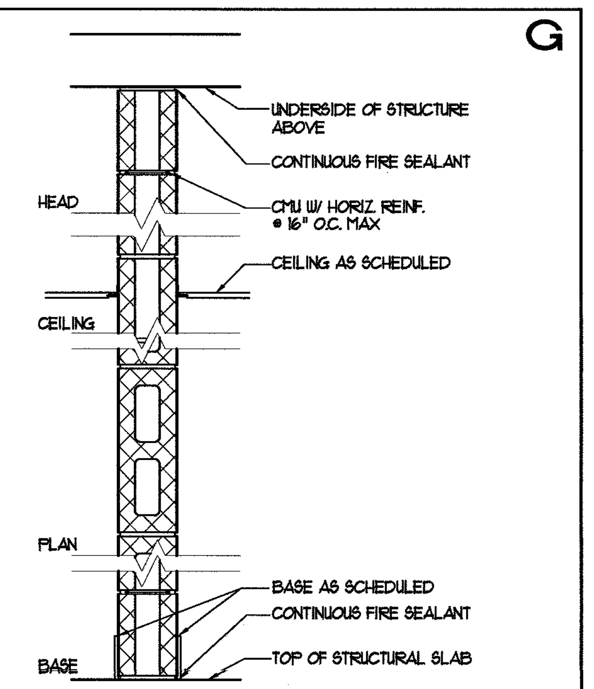

MASONRY PARTITION

TYPE	TOTAL THK.	CMU SIZE	BRICK SIZE	LIMIT. HGT.	NOTES	STC RTG.	UL NO.	FIRE RTG.
G	11 5/8"	12"	N/A	N/A	KEY INTO EXIST. BLOCK. EXTEND TO STRUCTURE ABOVE	51	U906	1 HR

GROUT CELLS SOLID AS REQUIRED BY STRUCTURAL DRAWINGS

H

-SEE FINISH SCHEDULE FOR SPECIAL WALL BOARD TYPES

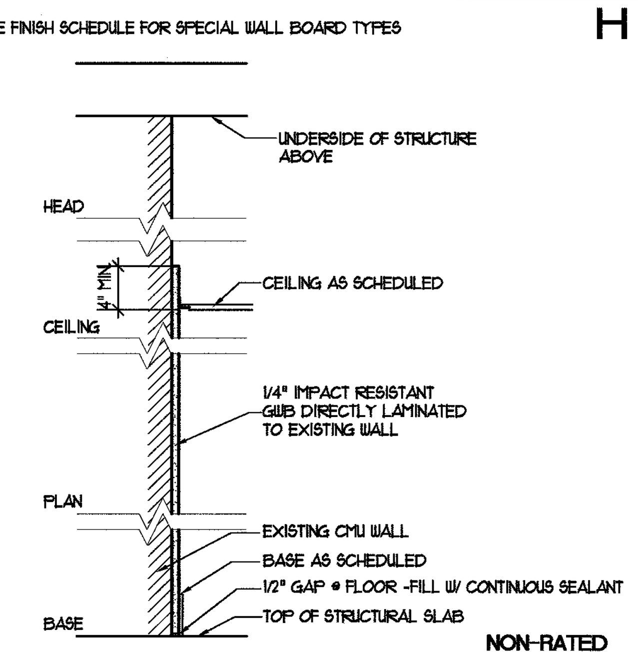

NON-RATED NON-BEARING

TYPE	TOTAL THK.	STUD SIZE	GA	LIMITING HGT. W/ STUDS @ 16"O.C. *	NOTES	STC RTG.	UL NO.	FIRE RTG.
H	1/4"	N/A	N/A	N/A	1/4" GWB	-	-	-
H1	8 3/8"	N/A	N/A	N/A	1/4" GWB CORR. SIDE 1/2" CEMENT BD. TOILET SIDE ON EXIST. CMU	-	-	-
H2	8 1/8"	N/A	N/A	N/A	1/4" GWB BOTH SIDES ON EXISTING CMU	-	-	-

J

-SEE FINISH SCHEDULE FOR SPECIAL GWB TYPES

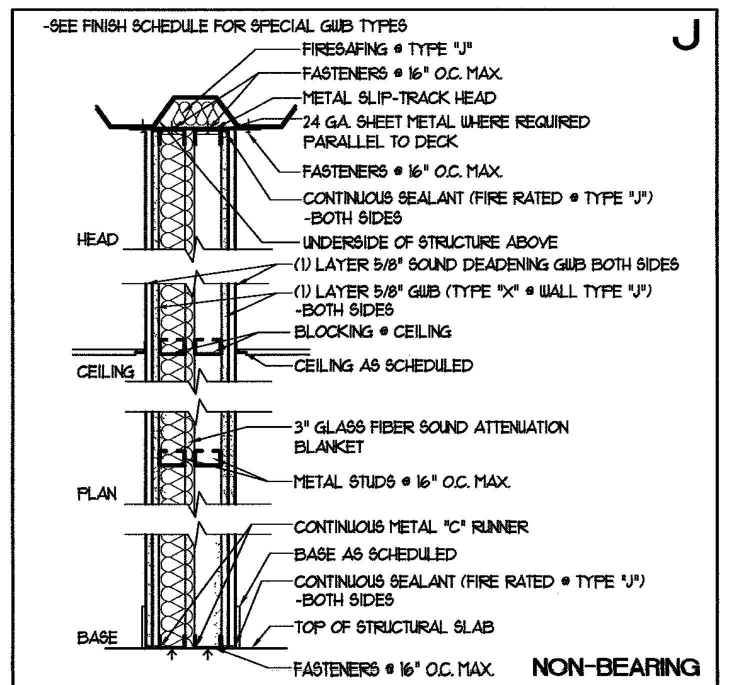

NON-BEARING

TYPE	TOTAL THK.	STUD SIZE	GA	LIMITING HGT. W/ STUDS @ 16"O.C. *	NOTES	STC RTG.	UL NO.	FIRE RTG.
J	1'-0 1/8"	3 5/8"	20	-	SOUND BLANKETS	59	U420	1 HR
J1	VARIES	2 1/2"	20	-	SOUND BLANKETS	59	-	-

-PROVIDE MID-POINT BLOCKING (TYP.)
* L/240 MAXIMUM ALLOWABLE DEFLECTION

K

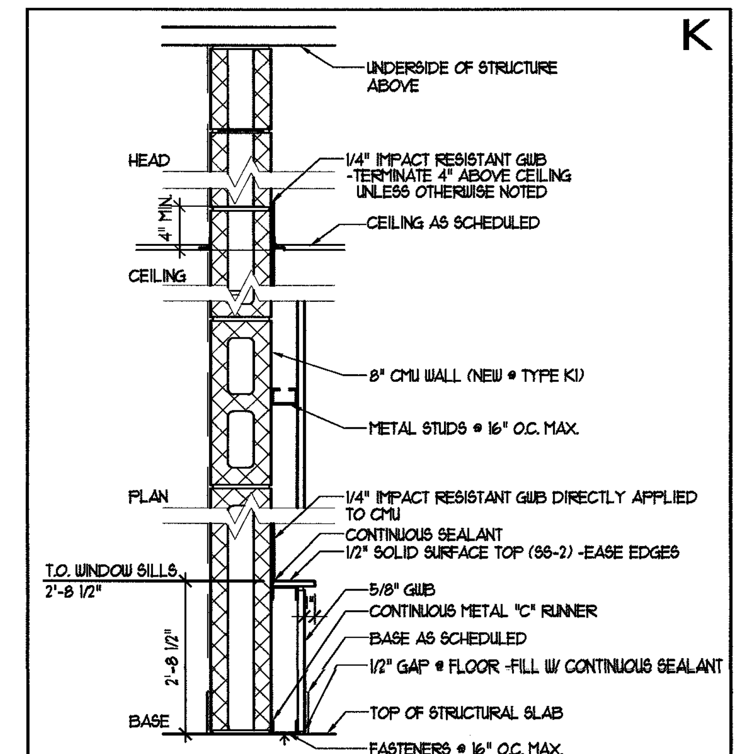

NON-BEARING

TYPE	TOTAL THK.	CMU SIZE	STUD SIZE	LIMIT. HGT.	NOTES	STC RTG.	UL NO.	FIRE RTG.
K	4 1/8"	-	2 1/2"	N/A	1/4" IMPACT RESISTANT GWB DIRECT APPLIED TO CMU	-	-	-
K1	11 3/4"	8"	2 1/2"	N/A	1/4" IMPACT RESISTANT GWB DIRECT APPLIED TO CMU	-	-	-
K2	1'-0"	8"	2 1/2"	N/A	1/4" IMPACT RESISTANT GWB DIRECT APPLIED TO CMU	-	-	-

M

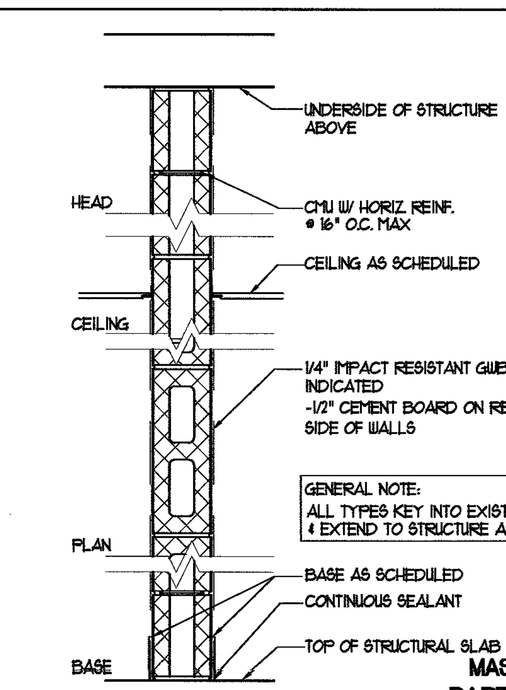

GENERAL NOTE:
ALL TYPES KEY INTO EXIST. BLOCK & EXTEND TO STRUCTURE ABOVE

MASONRY PARTITION

TYPE	TOTAL THK.	CMU SIZE	BRICK SIZE	LIMIT. HGT.	NOTES	STC RTG.	UL NO.	FIRE RTG.
M	3 5/8"	4"	N/A	N/A	-	44	-	-
M1	5 5/8"	6"	N/A	N/A	-	45	-	-
M2	7 7/8"	8"	N/A	N/A	1/4" IMPACT RESISTANT GWB ONE SIDE	50	-	-
M3	12 1/8"	12"	N/A	N/A	1/4" IMPACT RESISTANT GWB BOTH SIDES	51	-	-
M4	11 7/8"	12"	N/A	N/A	1/4" IMPACT RESISTANT GWB ONE SIDE	51	-	-
M5	8 1/8"	8"	N/A	N/A	1/4" IMPACT RESISTANT GWB BOTH SIDES	51	-	-

-GROUT CELLS SOLID AS REQUIRED BY STRUCTURAL DRAWINGS

nbj ARCHITECTURE
A Professional Limited Company
GROVE PARK SQUARE
11537-B NUCKOLS ROAD
Glen Allen, Virginia 23059
(804) 273-9811 fax: (804) 273-9843

RAPPAHANNOCK COMMUNITY COLLEGE

CAMPUS RENOVATIONS
WARSAW + GLENNS, VIRGINIA
PC: 260-17712

PARTITION TYPES

Date: MAY 11, 2010

REVISIONS

NO.	DATE

COMMONWEALTH OF VIRGINIA
STEPHEN FLOYD CYBULSKI
Lic. No. 013047
5/13/2010
ARCHITECT

Sheet A-14

File Number RCC-A14-PLAN